nsm

BL-AVR 4P

BRUSHLESS ALTERNATORS WITH AVR-d 4 Poles

ZB180

DIGITAL AVR-d

Patented
Digital with 3 phase sensing

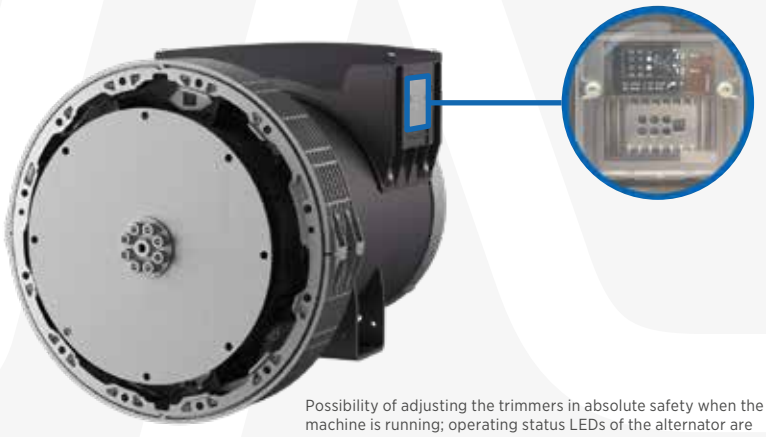

Possibility of adjusting the trimmers in absolute safety when the machine is running; operating status LEDs of the alternator are visible from the outside.

Technical characteristics

	ZB180	ZB180 -1
	Three-phase	Single-phase
Number of poles	4	
Rated power factor	0,8	1
Voltage accuracy	±0,5%	
T.H.D.	< 3% phase to phase	< 5%
Rated temperature	-15°C to +40°C (+60°C with derating)	
Excitation system	Self-excitation	
Execution	Brushless	
AVR model	AVR 625D- Digital with 3ph sensing	
	Right side as standard (left on request)	
Overload	110% of rated power for 1 hour in a 6 hour cycle	
Short circuit current	> 300% In	
Insulation class	H	

	ZB180	ZB180 -1
	Three-phase	Single-phase
Protection degree	IP21 (IP23 on request)	
Rated speed	1500rpm at 50Hz; 1800rpm at 60Hz	
Overspeed	2250rpm	
Rotation direction	CW-CCW	
Air flow requirement	7,8 m³/min at 1500rpm; 9,4 m³/min at 1800rpm	
NDE bearing type	6208 2RSC3	
Stator windings	2/3 pitch with auxiliary windings	full pitch with auxiliary windings
Rotor	With damping cage	
Number of leads	12	4
Standards	EN IEC 60034-1 ; EN IEC 60034-22 ; ISO 8528-3	
Electromagnetic compatibility	EN IEC 61000-6-2 ; EN IEC 61000-6-4	
Union Harmonization Legislation	2014/35/EU (Low Voltage) - 2014/30/EU (EMC)	

3ph

		50Hz -1500rpm							60Hz -1800rpm								
		S1 continuous 40/125°C cl. H					Stand-by 27/163°C		S1 continuous 40/125°C cl. H							Stand-by 27/163°C	
		3ph - 0,8 p.f.				1ph - 1/0,8 p.f.	3ph - 0,8 p.f.	1ph - 1 p.f.	3ph - 0,8 p.f.						1ph - 1/0,8 p.f.	3ph - 0,8 p.f.	1ph - 1 p.f.
Voltage	Series-Star Y	380	**400**	415	Eff. 4/4 load 400V 25°C	-	**400**	-	380	416	440	460	**480**	Eff. 4/4 load 480V 25°C	-	**480**	-
	Parallel Star YY	190	200	208		-	200	-	190	208	220	230	240		**240**	240	**240**
	Series-Delta Δ	220	230	240		**230**	230	**230**	220	240	254	266	277		277	277	277
	Parallel Delta ΔΔ	110	115	120		115	115	115	110	120	127	133	138		138	138	138
	Double Delta ΔΔ 1ph	-	-	-		230/115	-	230/115	-	-	-	-	-		277/138	-	277/138
Model		kVA			%	kVA	kVA	kVA	kVA					%	kVA	kVA	kVA
Power	ZB180 SC	30	**30**	30	86,2	**18**	33	19,8	35	38	40	40	**41**	86,5	**22,5**	45,1	24,8
	ZB180 MA	35	**35**	35	86,4	**21**	38,5	23,1	37	40	42	43	**45**	87,1	**25**	49,5	27,5
	ZB180 MB	40	**40**	40	87,1	**23**	44	25,3	44	47	49	50	**52**	87,9	**27,5**	57,2	30,3
	ZB180 MC	45	**45**	45	88,9	**26**	49,5	28,6	50	54	56	58	**60**	89,3	**30**	66	33,0
	ZB180 LA	50	**50**	50	89,1	**28**	55	30,8	57	62	64	65	**66**	89,8	**33**	72,6	36,3
	ZB180 LC	60	**60**	60	90,5	**33**	66	36,3	70	74	76	78	**80**	91,2	**40**	88	44,0
	ZB180 XA	72,5	**72,5**	72,5	91,3	**37**	79,8	40,7	80	84	86	88	**90**	92,2	**44**	99	48,4

Power S1 cl.H (ΔT=125°C) - below 1000m AMSL - A.T. < 40°C

1ph Dedicated

		50Hz -1500rpm									60Hz -1800rpm					
		S1 continuous 40/125°C cl. H							Stand-by 27/163°C		S1 continuous 40/125°C cl. H				Stand-by 27/163°C	
		1 p.f.				0,8 p.f.			1 p.f.	0,8 p.f.	1 - 0,8 p.f.				1 p.f.	0,8 p.f.
Voltage	Series	220	**230**	240	Eff. 1,0 p.f. 4/4 load 230V 25°C	220	230	240	**230**		220	230	**240**	Eff. 1,0 p.f. 4/4 load 240V 25°C	**240**	
	Parallel	110	115	120		110	115	120	115		110	115	120		120	
Model		kVA			%	kVA			kVA	kVA	kVA			%	kVA	kVA
Power	ZB180 SC-1	22	**22**	22	85,3	18	18	18	24,2	19,8	22	23	**24**	85,5	26,4	26,4
	ZB180 MB-1	26	**27**	27	85,9	22	22	22	29,7	24,2	26	27	**28**	86,4	30,8	30,8
	ZB180 MC-1	29	**30**	30	87,1	24	24	24	33	26,4	29	30	**31**	87,5	34,1	34,1
	ZB180 LA-1	34	**35**	35	87,8	28	28	28	38,5	30,8	34	35	**36**	88,1	39,6	39,6

Power S1 cl.H (ΔT=125°C) - below 1000m AMSL - A.T. < 40°C

Overall Dimensions

SAE 3

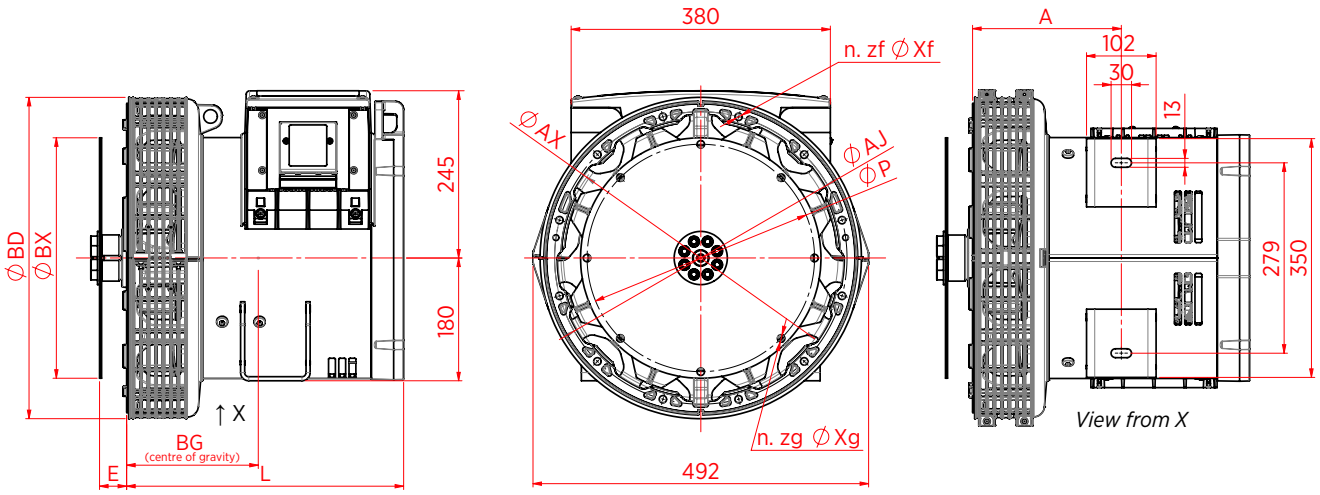

SAE 4

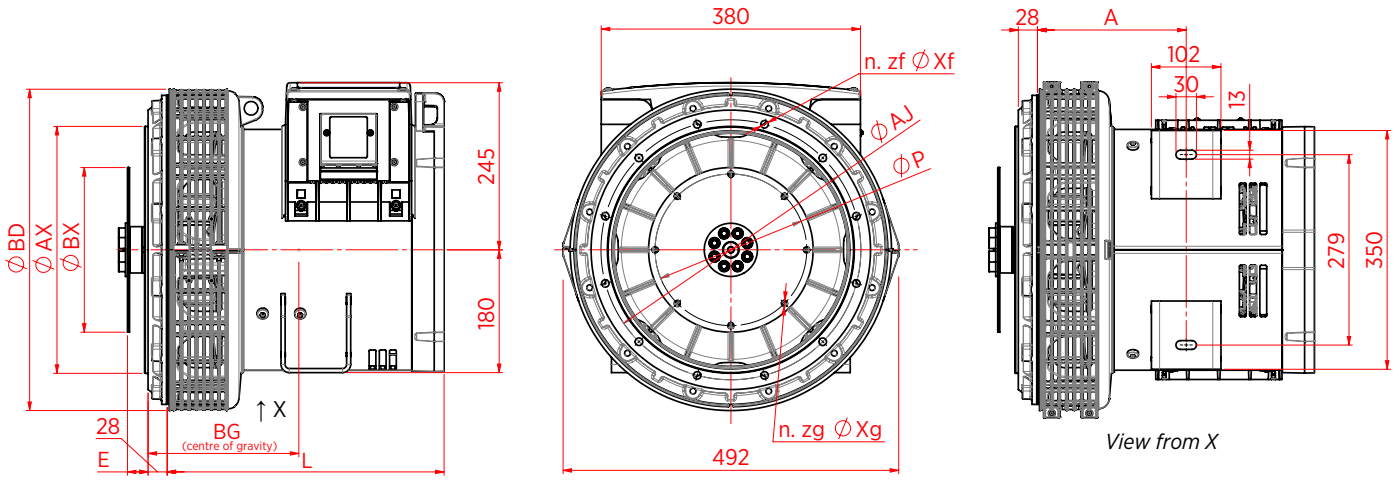

Model	L	A	BG		Weight	
			SAE 3/11,5	SAE 4/7,5	SAE 3	SAE 4
	[mm]	[mm]	[mm]		[Kg]	
ZB180 SC	406	218	201	226	127	129
ZB180 MA	469	248	218	244	142	144
ZB180 MB	469	248	222	249	153	154
ZB180 MC	469	248	230	256	169	171
ZB180 LA	556	280,5	256	282	183	185
ZB180 LC	556	280,5	275	301	219	221
ZB180 XA	656	333	311	-	259	-
ZB180 SC-1	406	218	201	226	125	127
ZB180 MB-1	469	248	222	249	151	152
ZB180 MC-1	469	248	230	256	167	169
ZB180 LA-1	556	280,5	256	282	181	183

Flange	AX	BD	AJ	Xf	zf
	[mm]	[mm]	[mm]	[mm]	[nr]
SAE 3	409,575	471	428,625	11	12
SAE 4	361,95	471	381	11	12

Joint	E	BX	P	Xg	zg
	[mm]	[mm]	[mm]	[mm]	[nr]
11,5	39,6	352,425	333,375	11	8
7,5	30,2	241,3	222,25	9	8

Overall Dimensions

B34

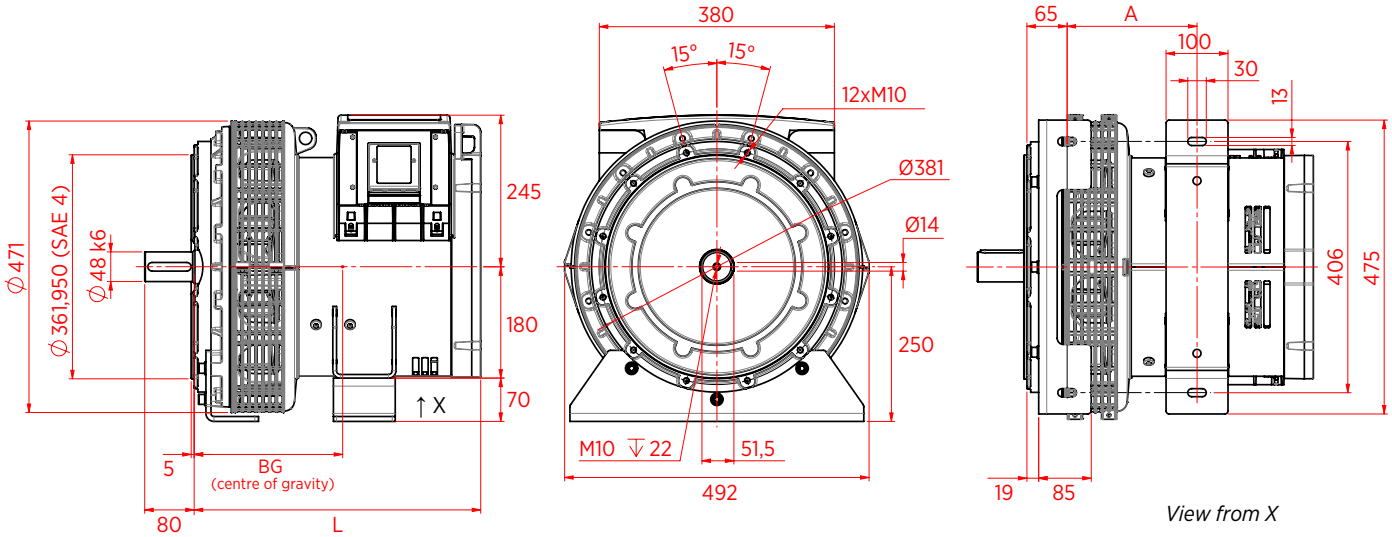

Model	L	A	BG	Weight
	[mm]	[mm]	[mm]	[Kg]
ZB180 SC	463	210	240	142
ZB180 MA	526	240	259	156
ZB180 MB	526	240	265	166
ZB180 MC	526	240	272	183
ZB180 LA	613	272,5	298	198
ZB180 LC	613	272,5	317	233
ZB180 XA	713	325	355	273
ZB180 SC-1	463	210	240	140
ZB180 MB-1	526	240	265	164
ZB180 MC-1	526	240	272	181
ZB180 LA-1	613	272,5	298	196

Technical data not binding: NSM reserves the right to modify the contents without prior notice.

NSM S.r.l.
Via Lazio 5/b
36015 Schio | Vicenza | Italy
T +39 0445 595888
F +39 0445 595800
info@nsmsrl.it
www.nsmsrl.it